Rain Gardens

What is a Rain Garden?

- A rain garden is a **landscape feature that reduces stormwater runoff** and water pollution, while providing wildlife habitat and a unique landscape aesthetic.
- A rain garden is a shallow depression that captures **first inch** of rain from impervious areas and infiltrates it into the ground.
- Rain gardens reduce runoff, thereby reducing the contaminants conveyed into our waterways.

A Basic Diagram…

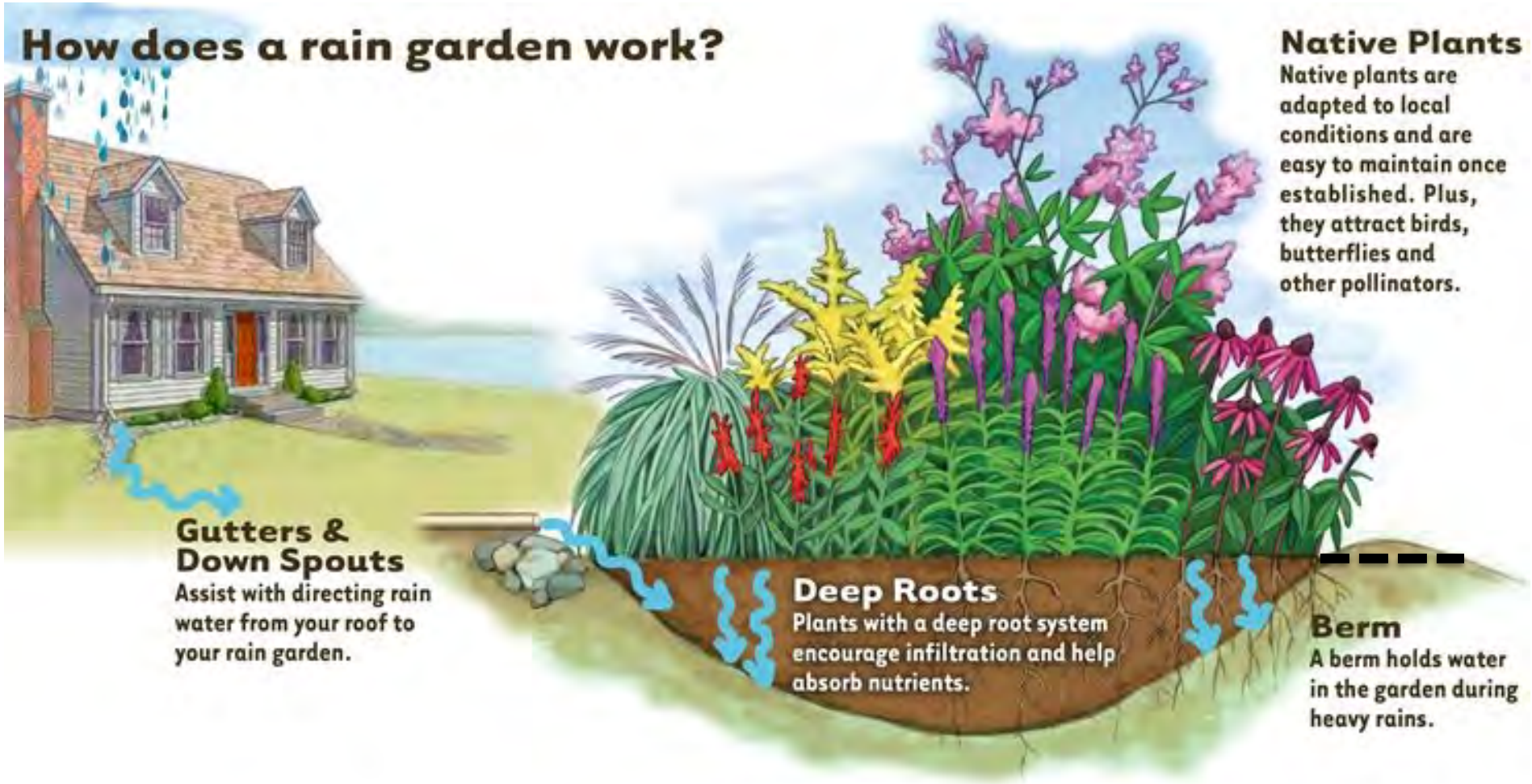

What Rain Gardens AREN'T

- **A rain garden will NOT stop flooding** (although many rain gardens adopted over a large area could reduce the frequency of floods) **NOT a flood control device!**
- **Rain gardens are NOT "water gardens"** – designed as water features, or to hold water or stay saturated indefinitely
- Rain gardens are not necessarily "wild"
- Rain gardens are not necessarily low-maintenance

Rain Garden Walkthrough

Site Analysis Phase

Design Phase

Materials Phase

Construction Phase

Plants & Maintenance

Rain Garden Walkthrough

(Note potential

Maintenance Problems

that can be caused be inappropriate design specifications…)

Understand Hydrology

- Hydrology = Water Flows Downhill!
- As rainwater first hits the ground, it either infiltrates into the ground, or it moves over the ground's surface in "sheet flow"
- As it flows downhill, it gathers together, becoming "confined flow"
- Confined flow gains velocity and can become erosive

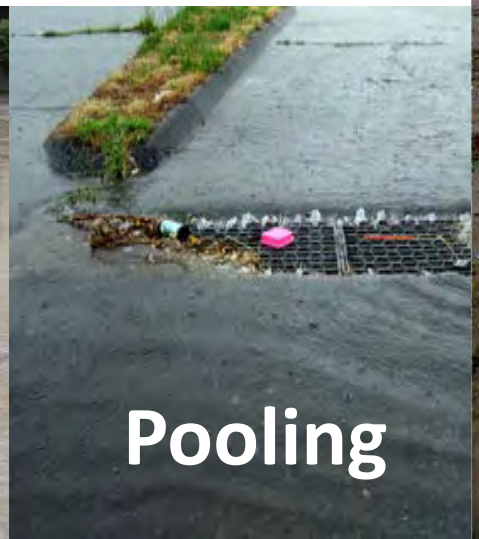

SITE ANALYSIS PHASE

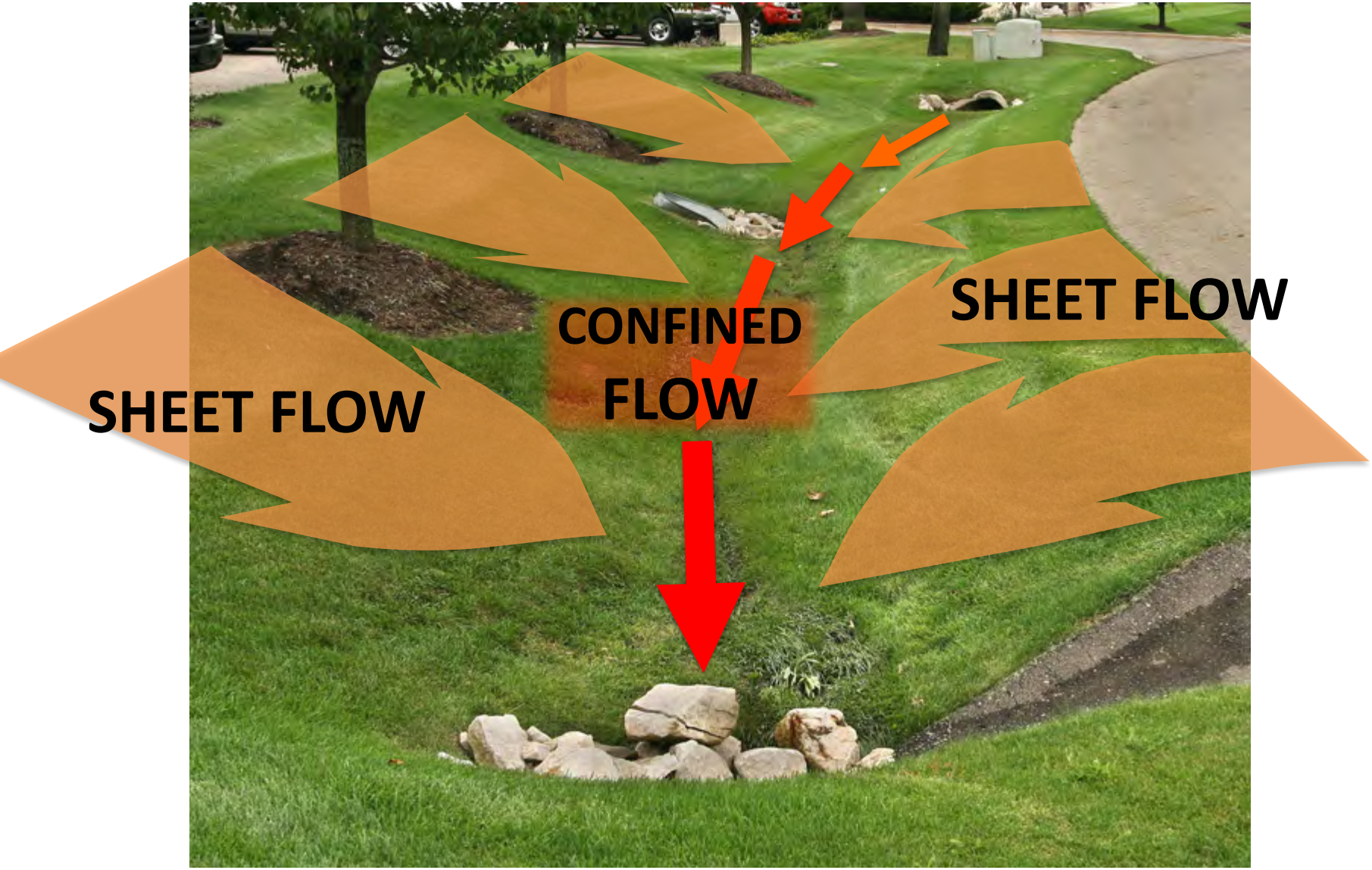

This picture is just to illustrate the difference between sheet and confined flow. Roadside ditches, or anywhere within the public right-of-way, are not appropriate rain garden sites.

First Step to Building a Rain Garden: Identify Drainage Areas

- Water that infiltrates into the ground cannot pollute the storm drains.
- Water that falls on vegetation (pervious) infiltrates, but water that falls on impervious surfaces does not.
- Therefore, the first priority is to capture water from impervious areas, including roofs, driveways, etc.

First Step: Identify Impervious Areas

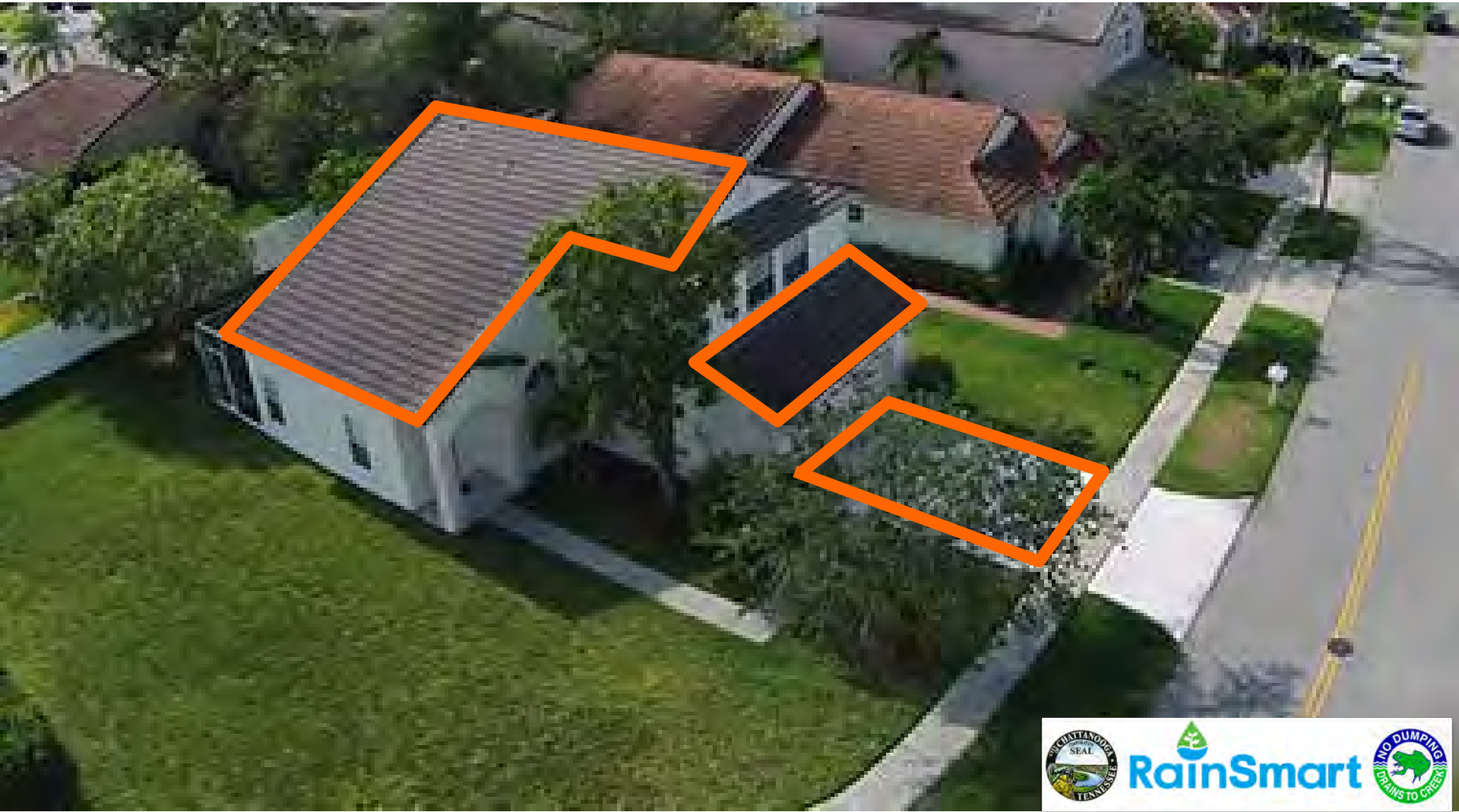

Select and Measure Drainage Area

Quick Rain Barrel or Rain Garden Sizing:

- At this point, you can use the tables we provide to make a quick approximation of the practices you'll need to install to accommodate this drainage area…

Select and Measure Drainage Area

Quick Rain Garden Sizing:

Rain Garden Area, ft²		Impervious Drainage Area, ft²
50		300
75		450
100	*Multiply/*	600
120	*Divide by*	700
140	*Factor of*	800
160	*1 / 6*	900
180	*or 0.17*	1000
200		1200
225		1300
250		1500

RainSmart

Select and Measure Drainage Area

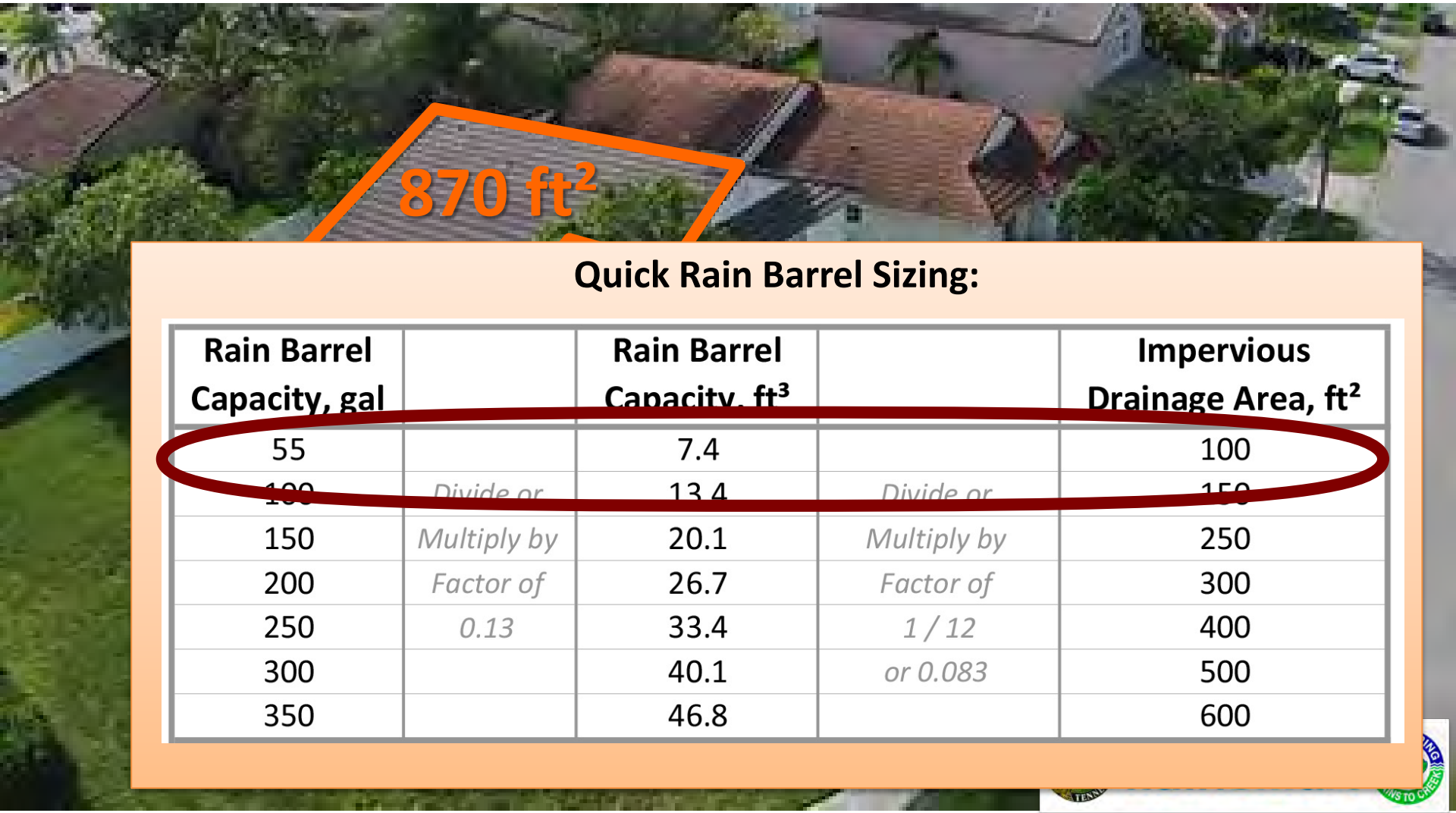

Quick Rain Barrel Sizing:

Rain Barrel Capacity, gal		Rain Barrel Capacity, ft³		Impervious Drainage Area, ft²
55		7.4		100
100	*Divide or*	13.4	*Divide or*	150
150	*Multiply by*	20.1	*Multiply by*	250
200	*Factor of*	26.7	*Factor of*	300
250	*0.13*	33.4	*1 / 12*	400
300		40.1	*or 0.083*	500
350		46.8		600

Where is the water going?

Where is the water going?

Other Questions to Ask:

- Can you disconnect any connected impervious areas from storm drains?
- Is there a suitable place for a rain barrel or cistern? Does the homeowner have any use for captured rain?
- Do you anticipate any particular pollutants coming from this impervious surface?

RainSmart

Check Slope of Receiving Pervious Area

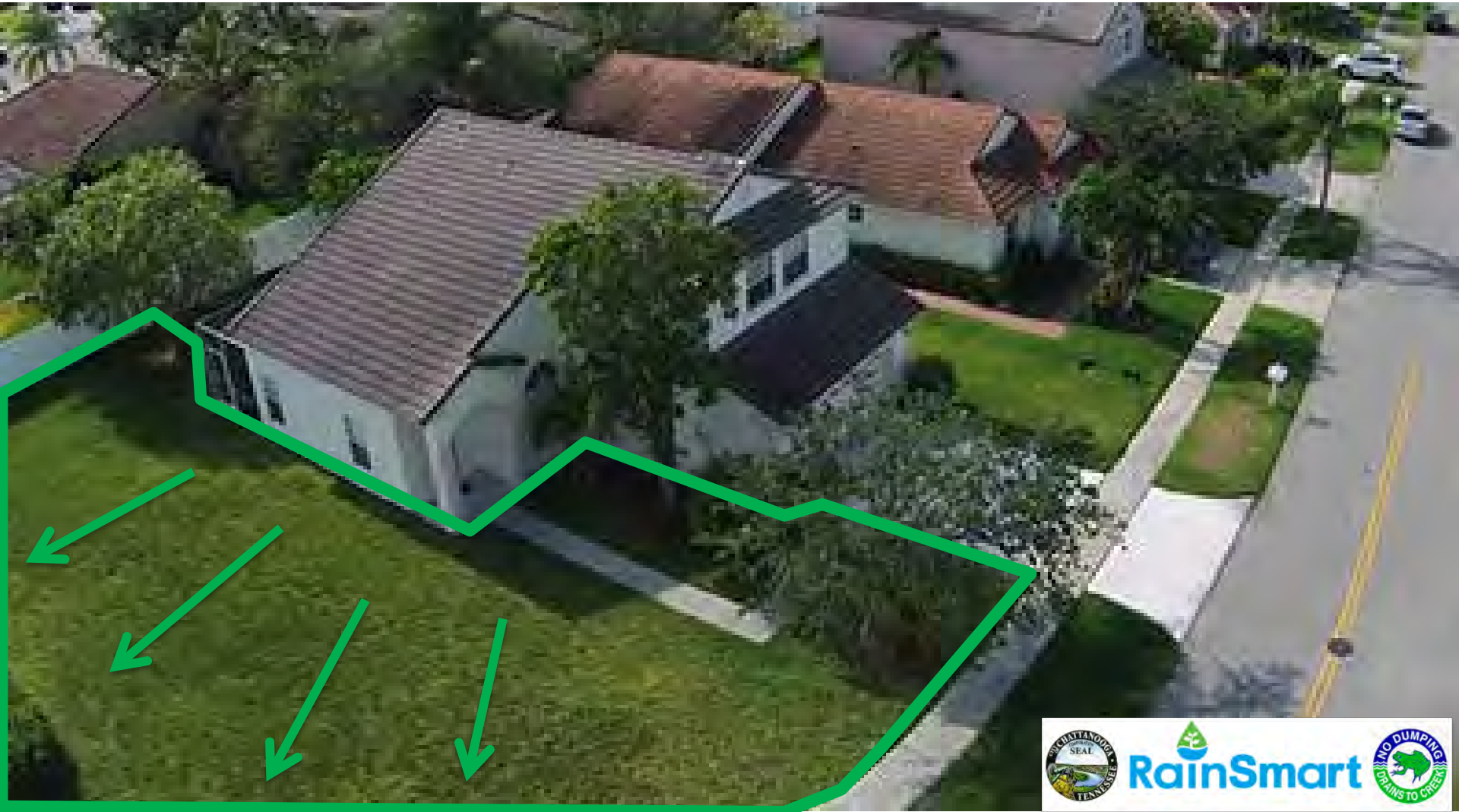

Check Slope of Receiving Pervious Area

1. Place two stakes, one at the top of the slope, the other at the bottom
2. Tie a string firmly between each stake
3. The difference between the height of each stake is the rise, the distance between the two stakes is run.

Rise / Run = Slope

Begin RainSmart "Exhibit A" – Design Documents

- At this point, you should start documenting your work for your RainSmart application.
- There are four simple drawings, a soil analysis sheet and a design worksheet.
- The requirements are simple, but do entail several details.
- We will provide you with templates for each of these submittals.

Locating the Rain Garden on Site

- NOT in public right-of-way or utility easement, NOT in drainage ditches
- 10’ AWAY FROM FOUNDATION
  - The rain garden should be at least 10’ from any building so that infiltrated water does not compromise building’s foundation or seep into a basement.
- 25’ AWAY FROM SEPTIC
  - Do not place rain garden near or over a septic tank, septic field, or sewer service.
- 25’ OR MORE FROM WELLHEAD – seek technical advice
- PERCOLATING SOILS
  - Rain gardens should be located in soils that infiltrate water – thus, do not place RG in a part of the yard where water ponds. This defeats the purpose of the rain garden, which is to infiltrate water

Locating the Rain Garden on Site

Locating the Rain Garden on Site – Other Considerations

- NOT TOUCHING WATER TABLE
  - Make sure water table is at least 2’ below soil surface.
- FLAT GROUND
  - Rain gardens should be located in a relatively flat location, where the slope is ideally 3-8%, but no steeper than 8-10%. Locating a rain garden on a steeper slope will increase the required depth and the amount of labor required to install the rain garden.
- SUNNY sites preferable to shady ones
- DOWN-SLOPE FROM HOUSE, not above house.
- CALL 811
  - Always call 811, a free hotline for locating any underground utilities. They ask that you call 72 hours before you dig. (But calling well ahead of time, once you have a rough idea of the location, can save you from having to seriously adjust your design, down the road.)

811®
Know what’s below.
Call before you dig.

RainSmart

DO NOT forget to call 811!

EPB, CCTV, AT&T okay, but Gas was not – we had to move our rain garden

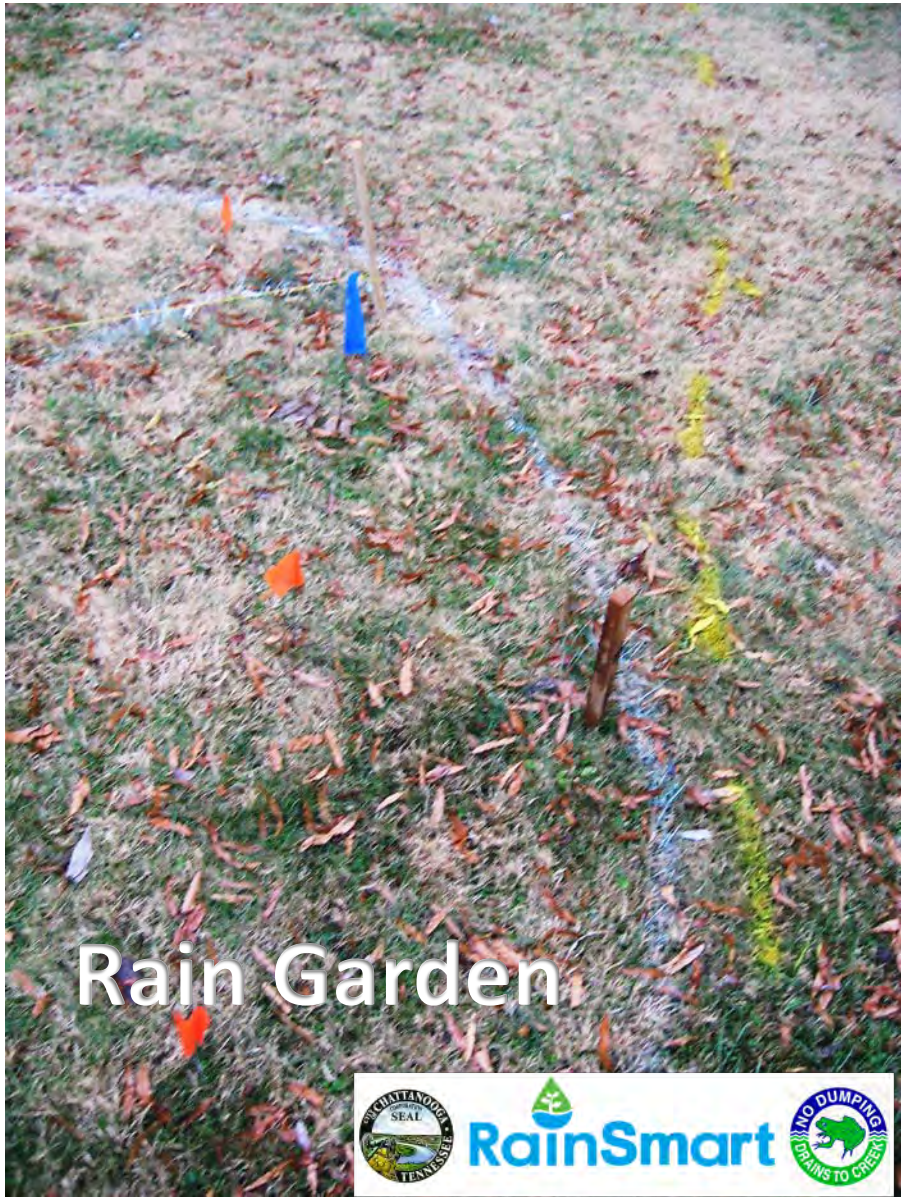

Calculate Drainage Area

Next Step: Investigate Soil

- **First, Percolation Test:**
- The **percolation test** finds your **subsoil's infiltration rate**
- If you have an area that you'd like to build a rain garden, dig a hole 18" deep and fill it with water. Wait until it drains, then fill it up again with about a foot of water. The SECOND pour counts!

SITE ANALYSIS PHASE

This is what you want your percolation test pit to look like – although no need for the coffee can!

Do one pour first, and don't time it.

Do a second pour, and note the time of the pour, and how long it takes to empty completely.
(You'll need to provide this info on your RainSmart worksheet.)

Percolation Test

- **First, Percolation Test:**
- The **percolation test** finds your **subsoil's infiltration rate**
- If you have an area that you'd like to build a rain garden, dig a hole 18" deep and fill it with water. Wait until it drains, then fill it up again with about a foot of water. The SECOND pour counts!
  - **If it has drained in 72 hours** (3 days), this site has suitable soils for a rain garden.
  - If it does not drain in 72 hours, you should find a different location for a rain garden.
  - If it drains in around 24 hours, you have a "quick-draining" rain garden site, and you should select your plant palette accordingly.
  - (If it never drains, you may have clogged the hole when you dug it and poured water in! This happens in clay soils – Try making another hole.)

- If water stays ponded in this site year-round, you might want to consider a water garden or wet garden, but a rain garden is not for you.

Next, Soil Texture Analysis

- The **Soil Texture Analysis** tells you how you will need to **amend existing soil** in order to achieve a sandy loam for backfill.
- To determine soil texture: Using a simple manual soil texture test, determine whether you have predominantly sandy or clayey soils.
  - Sandy loam soils will be suitable to use for rain garden fill soil. Clayey soils will need to be removed and replaced with sandier soil. Some of the clay can be used for constructing the berm.

RIBBON TEST: CLAYEY

SANDIER

Test Soils for Texture

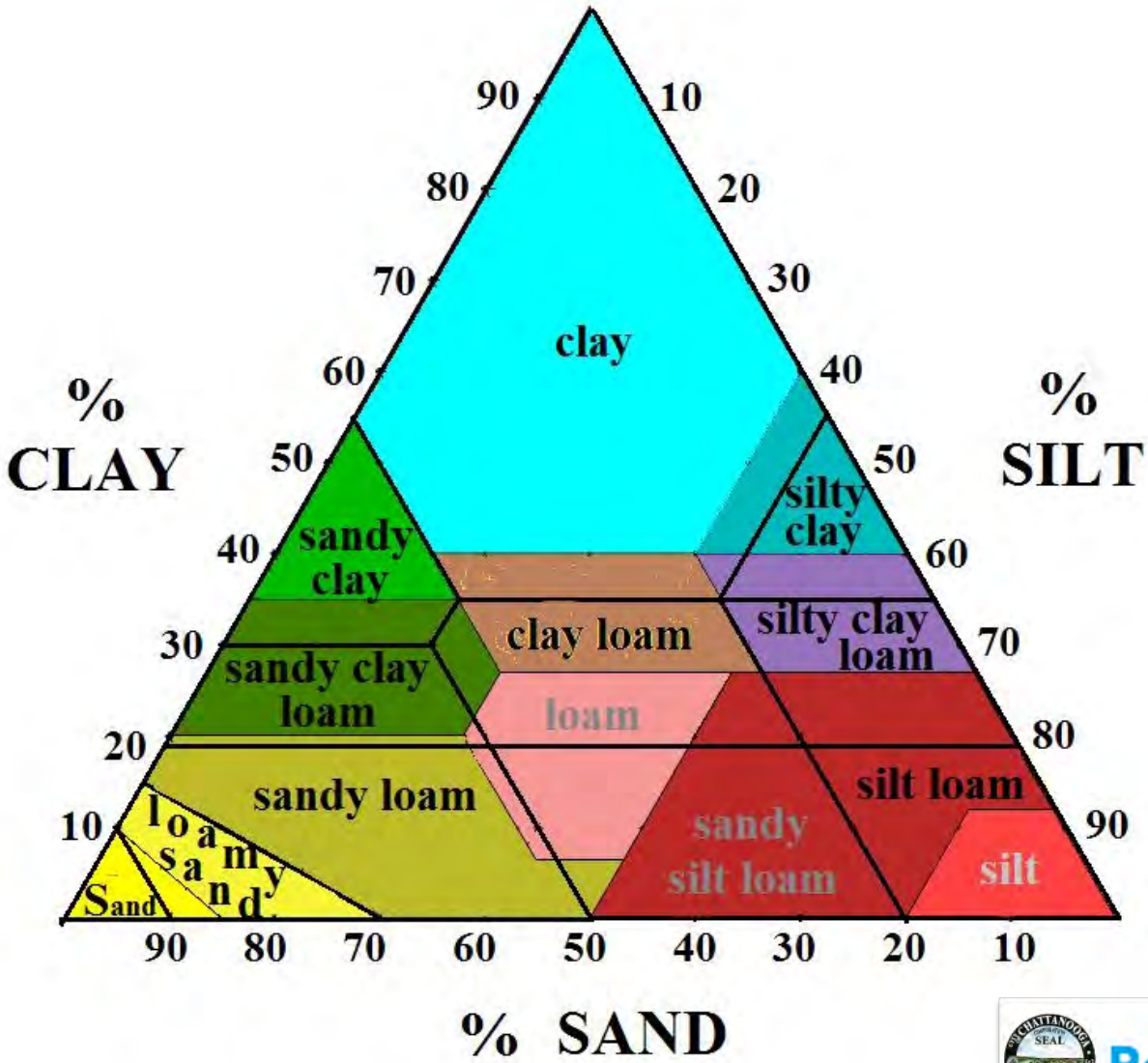

Ribbon Test for Soil Texture

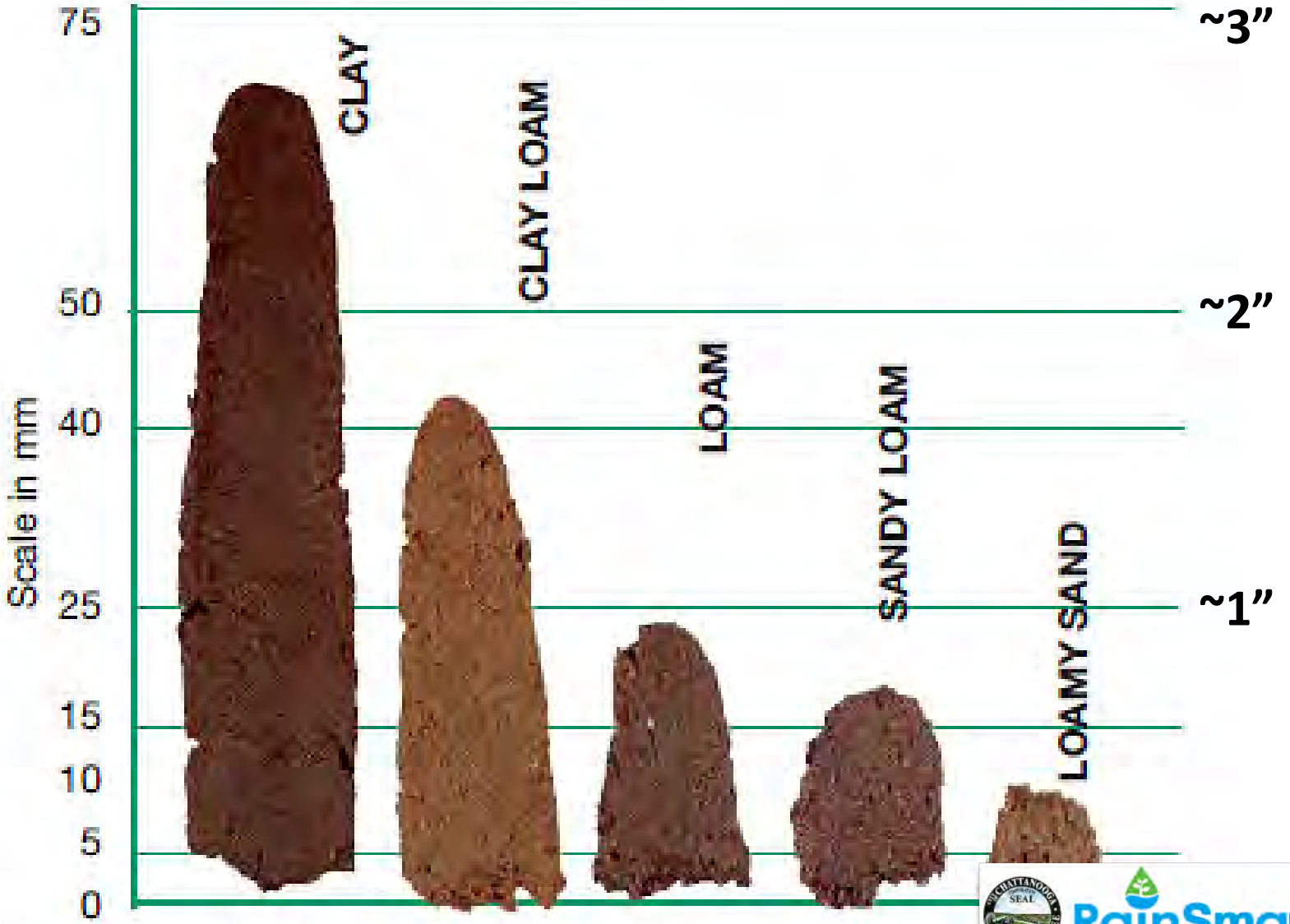

SITE ANALYSIS PHASE

Use soil core sampler (or shovel) to see how deep the topsoil is. Typically you'll find a darker topsoil from 2 to 8" deep, then a more red-colored, heavier clay, below the topsoil layer.

Typically, both our topsoil and underlying soils are both clay-based soils.

However, the darker topsoil may be good to use for backfill, while the lower redder, heavier clay is *not* – but, it *IS* suitable to build a berm.

Examine your soils…

Calculate Drainage Area

Calculate Drainage Area

Design Phase

Calculate Rain Garden Size

- **Thumbprint calculation:** *** 1:6 ***
  - In clay loam soils typical of Chattanooga, a general rule of thumb is that the required area should be around **1/6th** of the impervious drainage area.
    - Loamier or sandier subsoils will need slightly less area
    - Heavier clay subsoils may need a greater area, greater depth, and may need to alter design specs or relocate
- Example:
  - You want to capture **1,000 ft²** of roof area:
  - 1,000ft² x (1/6) = rain garden size
  - 1,000ft² x (0.17) = **170 ft²**

Calculate Rain Garden Size

Thumbprint calculation:

- You want to capture 870 ft² of roof area:
- 870ft² x **(1/6)** = RG size
- 870ft² x (0.17) = **148 ft²**

- So, your rain garden should be around 140 to 150 ft²

(*Yes, for goodness sakes, round it off!*)

Calculate Rain Garden Size

Quick Rain Garden Sizing:

Rain Garden Area, ft²		Impervious Drainage Area, ft²
50		300
75		450
100	*Multiply/*	600
120	*Divide by*	700
140	*Factor of*	800
160	*1 / 6*	900
180	*or 0.17*	1000
200		1200
225		1300
250		1500

RainSmart

Calculate Rain Barrel Size

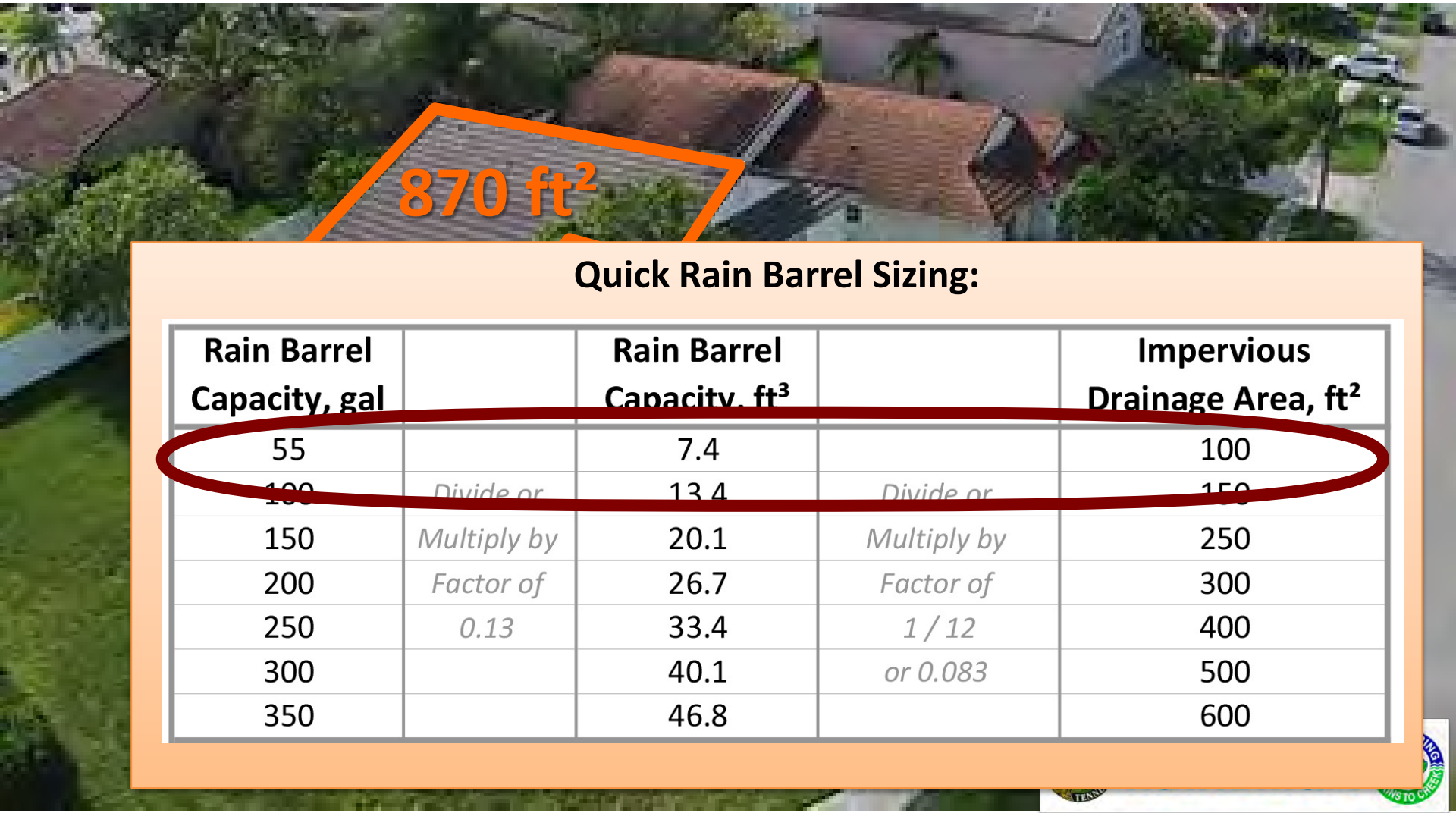

Quick Rain Barrel Sizing:

Rain Barrel Capacity, gal		Rain Barrel Capacity, ft³		Impervious Drainage Area, ft²
55		7.4		100
100	*Divide or*	13.4	*Divide or*	150
150	*Multiply by*	20.1	*Multiply by*	250
200	*Factor of*	26.7	*Factor of*	300
250	*0.13*	33.4	*1 / 12*	400
300		40.1	*or 0.083*	500
350		46.8		600

Now that you know where, and how big to build your RG:

Create Rain Garden Shape

- Look at your overall landscape – the RG should fit into the site overall
- Rain gardens are usually oval or ellipse shaped; many people create "kidney bean" shapes
- Consider where the water enters the area, and where the overflow will be

Create Rain Garden Shape

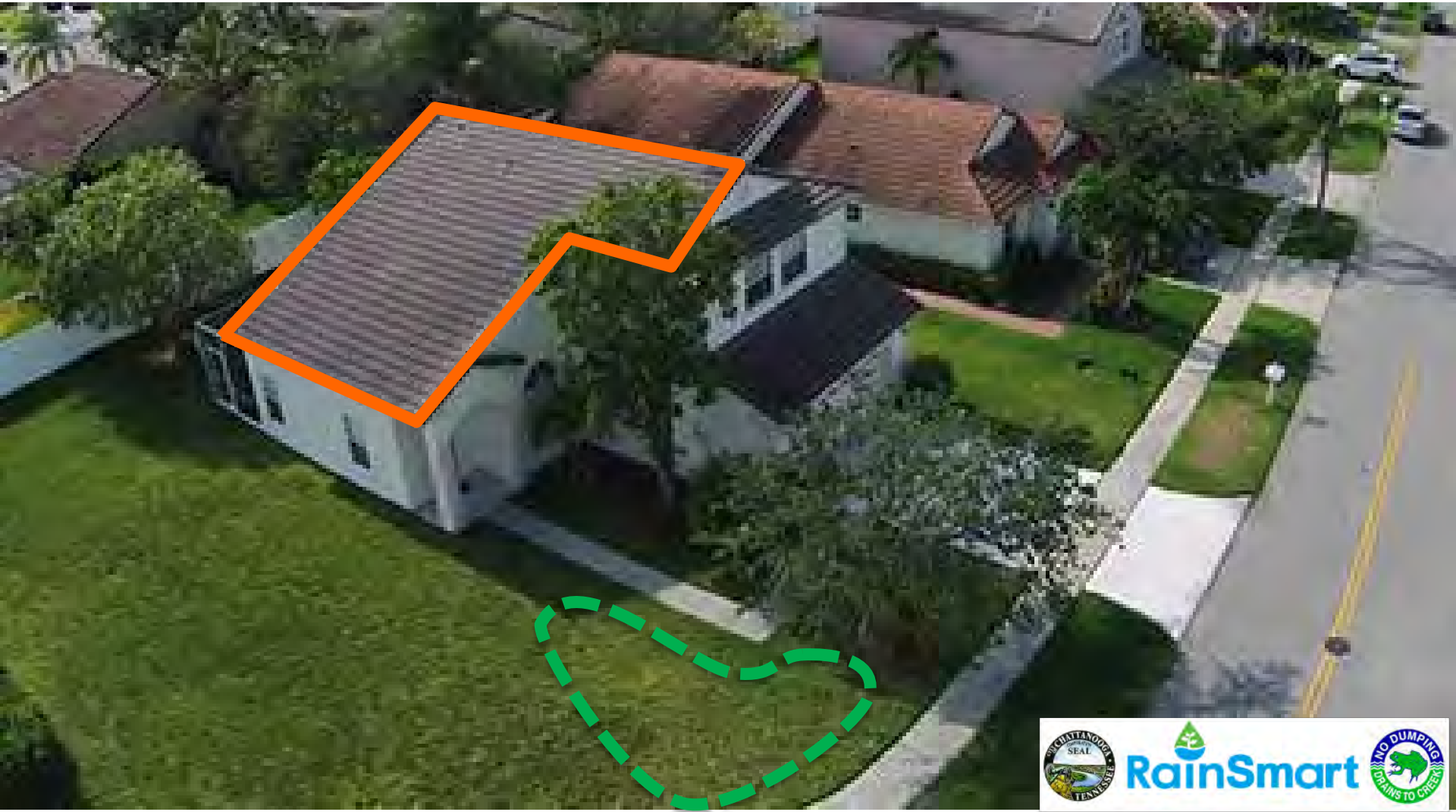

Estimate Rounded Rain Garden Area

- RainSmart method of estimating area of rounded shapes: *Curves that are roughly circular result in around 80-85% of the surface area that would be contained in a rectangle of the same size. So if you draw out a rounded 10'x20' RG, you'll have around 170ft²*

Length x *Width* x **0.85** = *Rounded Rain Garden Area*

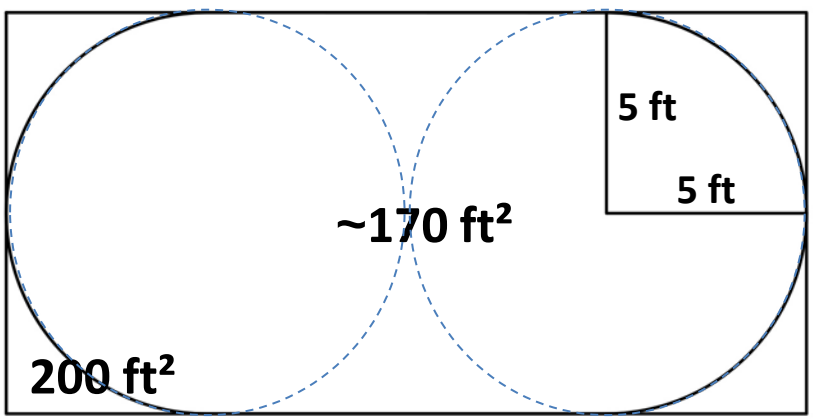

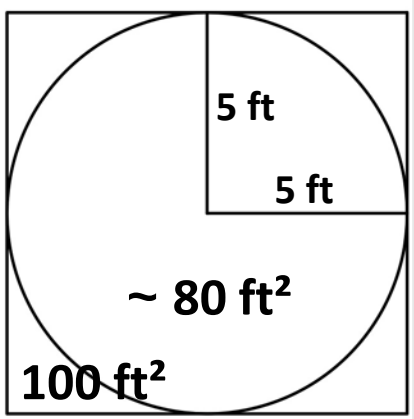

Rough Measurements

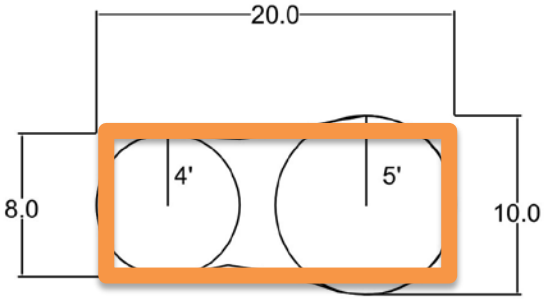

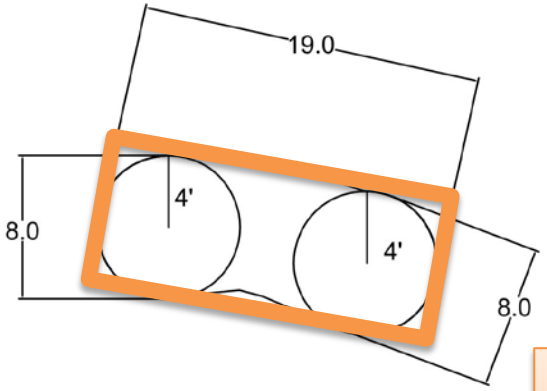

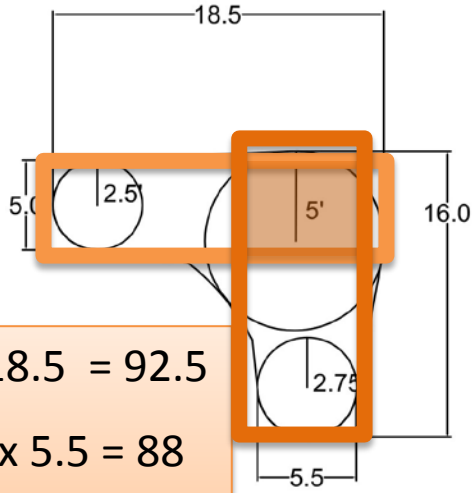

9 x 20 = 180

Multiply by 85%

180 x (0.85) = **<u>153 ft²</u>**

8 x 19 = 152

Multiply by 85%

152 x (0.85) = **<u>129 ft²</u>**

5 x 18.5 = 92.5

16 x 5.5 = 88

92.5 + 88 = 180.5

Multiply by 85%

180.5 x (0.85) = **<u>153 ft²</u>**

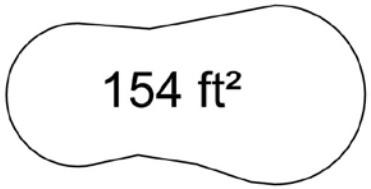

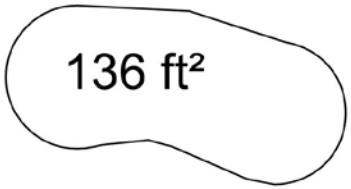

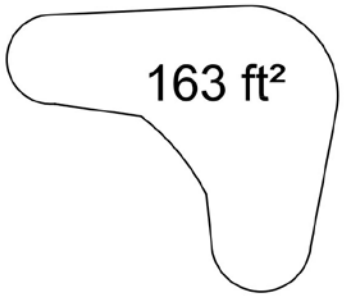

Actual Area

Create Rain Garden Shape

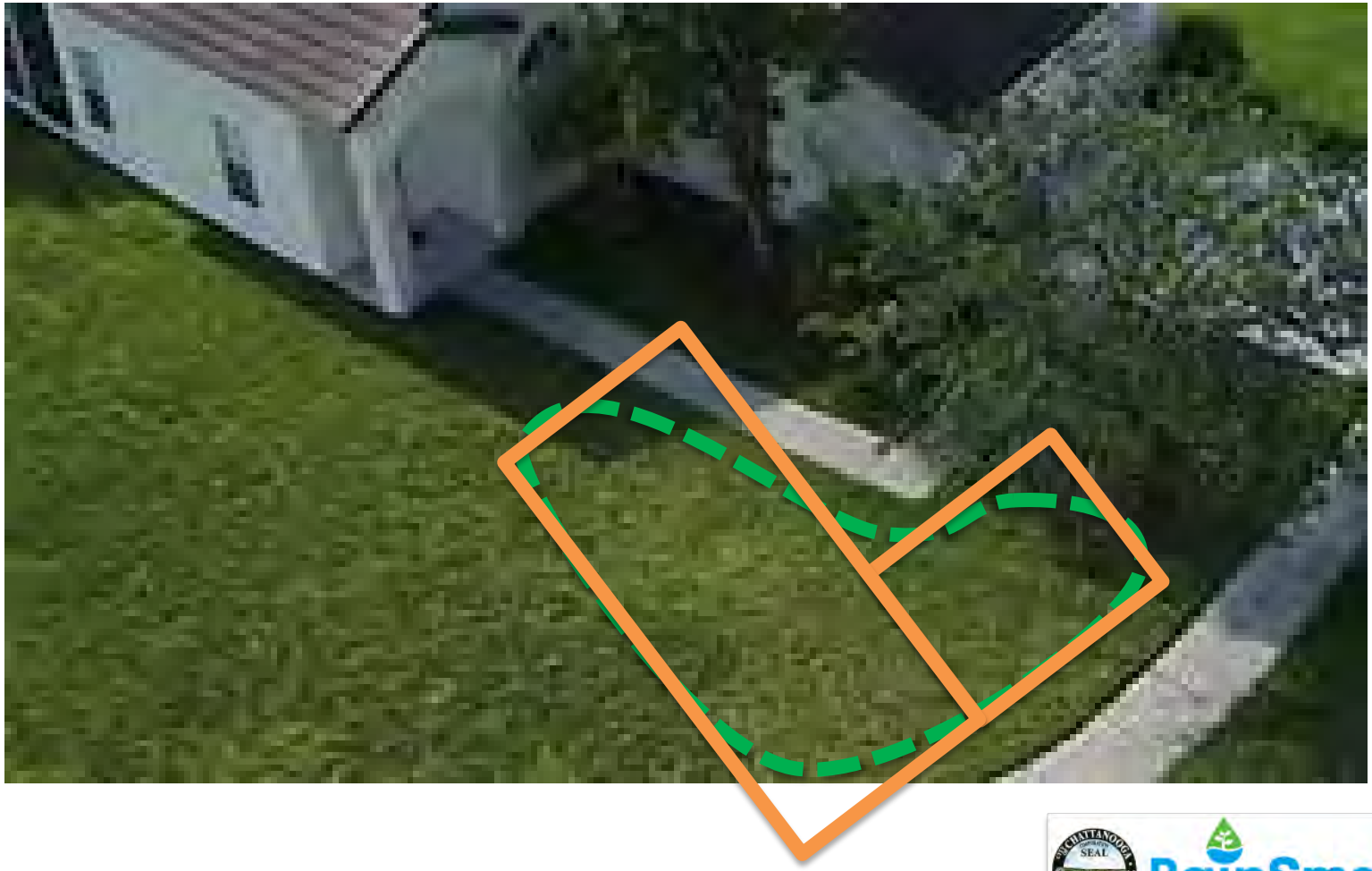

RainSmart

Create Rain Garden Shape

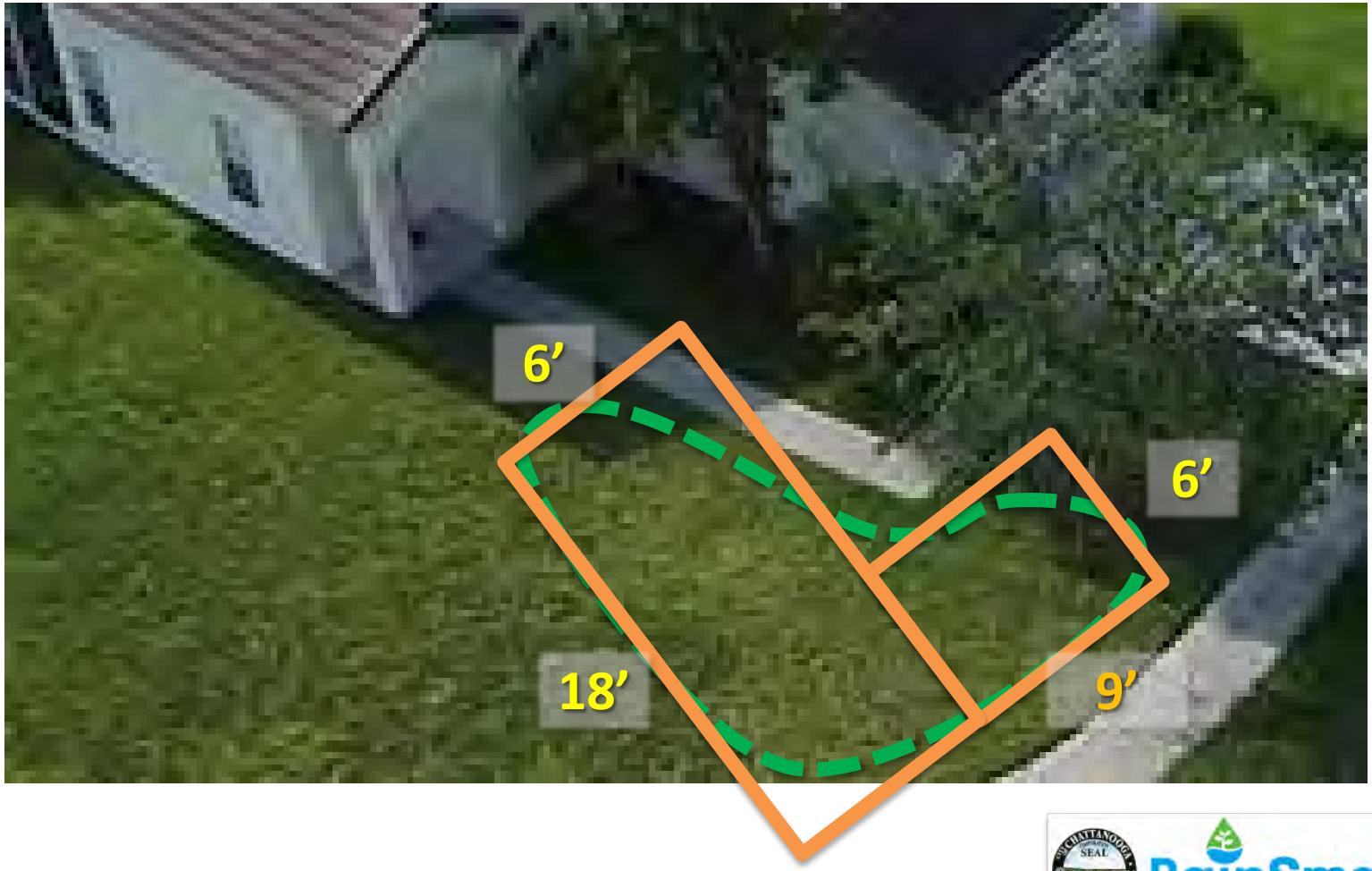

Create Rain Garden Shape

Add up rectangular areas:

- 144 + 48 = 192

Multiply by 85%, or 0.85:

- 192 x (0.85) = <u>163 ft²</u>
- So, your rain garden is probably around **<u>160 ft²</u>**

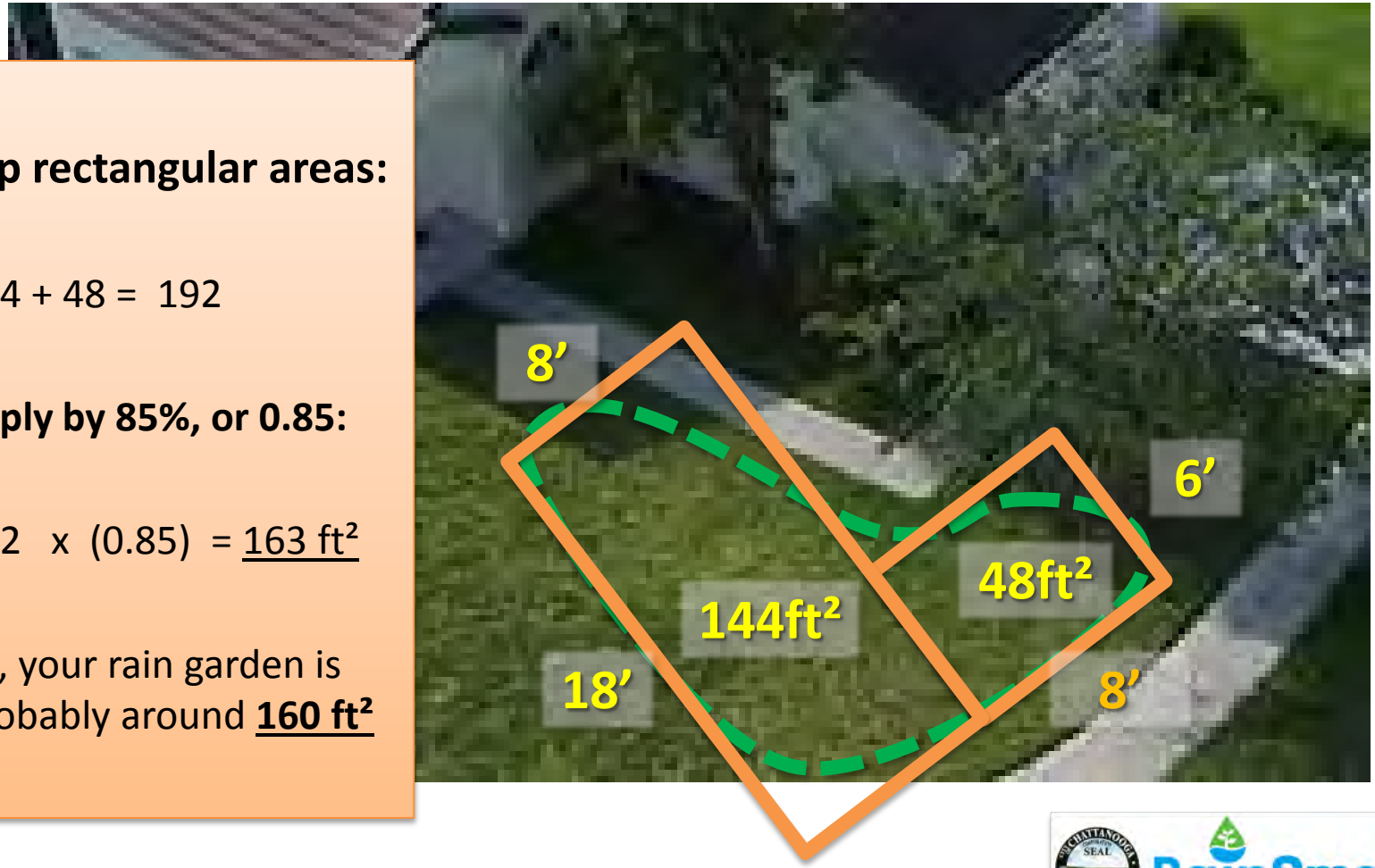

Create Rain Garden Shape

Add up rectangular areas:

- 144 + 48 = 192

Multiply by 85%, or 0.85:

- 192 x (0.85) = 163 ft²

- So, your rain garden is probably around **160 ft²**
- ***Does that match the requirement for our drainage area?***

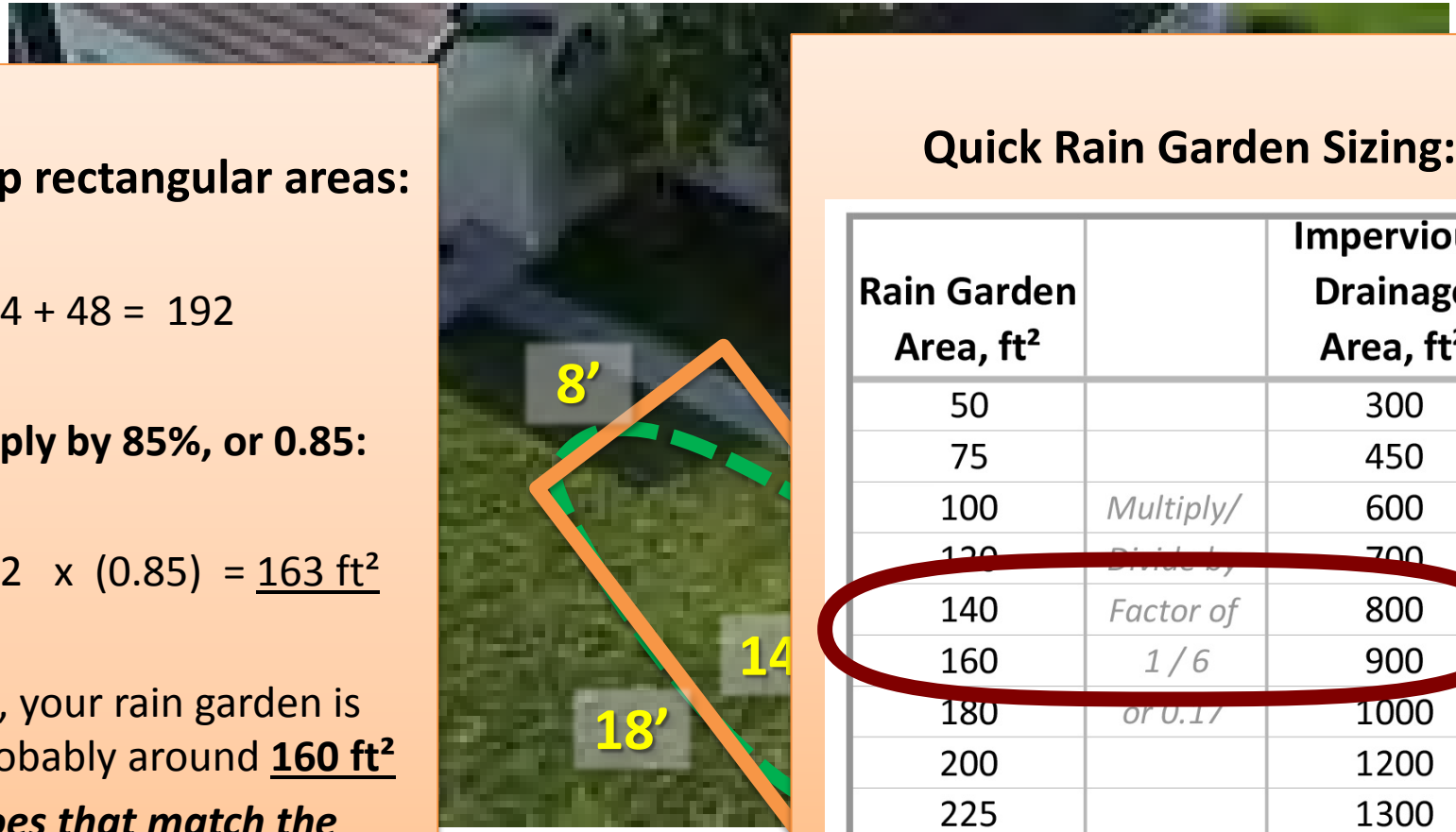

Quick Rain Garden Sizing:

Rain Garden Area, ft²		Impervious Drainage Area, ft²
50		300
75		450
100	*Multiply/*	600
120	*Divide by*	700
140	*Factor of*	800
160	*1 / 6*	900
180	*or 0.17*	1000
200		1200
225		1300
250		1500

Create Rain Garden Shape

Mark the rain garden with spray paint - You can use a garden hose to help create smooth curves

Inlet(s) and Overflow

- **Mark the inlet(s)**
  - Where does water enter the rain garden?
  - *How* is it conveyed – as sheet or confined flow?
    - If flow is confined, you will need to "armor" the inlet with rock
      - The small rough rocks found during excavation will work well for this – just pile them up under the pipe
      - Flat landscaping rock is also fine
      - If you fail to "armor" this area, it will end up eroding around that spot and can introduce fines into the ponding water that will settle out and reduce infiltration
    - If water enters as sheet flow, you don't need to armor that area with rock, but do plant stoloniferous or spreading plants that will hold that soil during heavy rains
      - Yarrow, Mint-family, *Physostegia*, tickseed, non-clumping grasses and sedges
      - Some low-growing asters and forbs that have predominantly ground-level foliage such as *Rudbeckia*
      - Suckering shrubs such as *Itea* and *Clethra*

Inlet(s) and Overflow

- **Other Notes on Inlets**
- The steeper the gradient, the more flow there will be to dissipate. Usually a small pile of odd-shaped rock should be fine, and in many cases, you can get away with just one big flat rock
- If you noticed particular contaminants likely to come from your drainage area, you may consider how to trap them at the pipe for easy removal as a part of ongoing maintenance

Inlet(s) and Overflow

- **Mark the overflow**
  - Where does water exit the rain garden? From there, where does it go, and is that path safe, and stable?
  - The overflow, or "weir" restricts water flow to a small area, thus increasing velocity.
  - Typically, the weir needs to be armored with rock.
    - Usually just needs rock along top and outer/lower side
    - Flat rock arranged in shelves or steps works well
  - **Rule of thumb for armored Weir (overflow) Length:**
    - **1 to 1.5ft of weir for per 100 ft² RG**
    - 2.25ft long weir for 150 ft² RG

Inlet(s) and Overflow

- **Other notes on Overflow**
  - You could design a wide weir at 5’ per 100ft² of RG
  - We recommend armored, because an unarmored berm requires you to be more picky to ensure a perfectly level overflow, otherwise water will overflow unevenly, forming channels and eroding

Rain Garden Walkthrough

~~Site Analysis Phase~~

~~Design Phase~~

Materials Phase

Construction Phase

Plants & Maintenance

Materials

1. Document these three things on your "Existing Soils Worksheet" as part of Exhibit A:
   1. Percolation Test
   2. Soil Analysis
   3. Soil Amendments

2. About Soil Amendments
   - For your backfilled soil, you are aiming for a **sandy loam.**
   - This includes some fines (clay) and carbon (organics/humus)

3. Inspection # 1
   - RainSmart Representative will inspect soils at the point you begin to backfill
   - Best to be clear about these materials up front so that no time is wasted on workday.
   - Happy to look at soil samples or perc test pit ahead of time.

Soil Amendments - Topsoil

- After your soil analysis, you should know whether you can re-use excavated topsoil
- If topsoil is good, but only 4” deep, with bermuda grass roots, don’t re-use
- If it’s six or seven inches deep, you can use it, but pull off any bermuda grass first and as you excavate, store on a tarp
- You may want to save sod, especially to cover any trenches
- You may use ½ soil conditioner and ½ topsoil if you want to increase carbon – but do NOT use a product with fertilizer in it!

Soil Amendments - Sand

- Use either playground/baseball field sand, or dredged river sand. Don't use masonry sand
- Here are some numbers – these vary according to where/when you source your materials but this is our general guideline:

1:3 or 1:4 ratio of topsoil to sandy soil

- Choose which ratio to use based on what texture your topsoil and sandy soil or pure sand amendments are…
- Not rocket science, but we do want to have as accurate numbers as possible, for program development

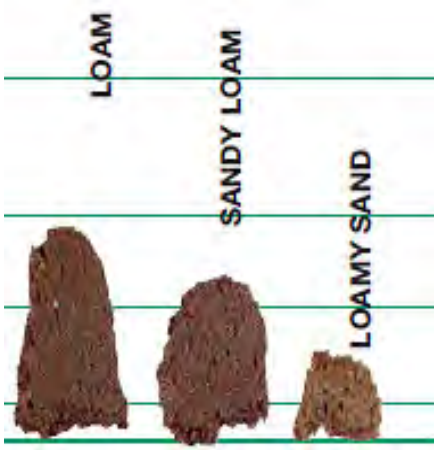

Soil Amendments – Compost

- Compost is to "kick-start" the biology of the device
- Recommend about **5-10 bags** of compost
  - Minimum 3-5 bags
  - Rule of thumb could be 1 bag per 30 ft² of RG
  - Do not use chicken manure compost, or any other product with fertilizer in it – whether synthetic or organic

Soil Amendments – Mulch

- Mulch has multiple functions – specific in RG's is to withstand water
- Use 3-4 inches of mulch
  - Over time it will settle, doesn't matter if this eats into ponding depth
  - Leave space around native grasses
  - 2' width around edge optional
- Use **undyed, shredded, hardwood mulch**
  - Do not use wood chips or pine bark!
  - Dyed hardwood mulch not ideal
  - Shredded Cypress okay
  - Do not use weedy mulch

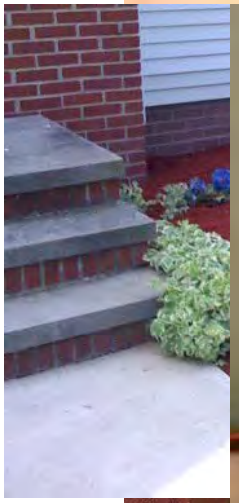

Soil Amendments – Plants

- We'll discuss plants later on…